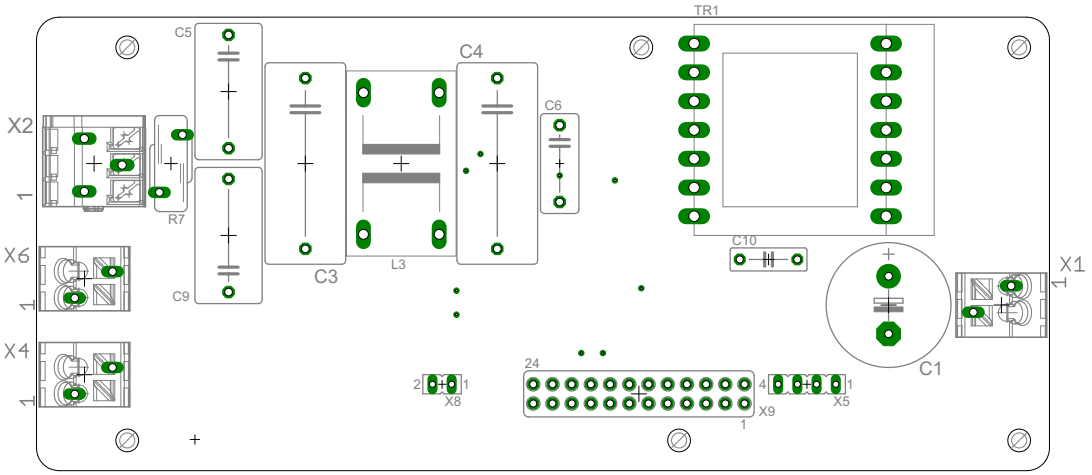
TR1
C5
C4
C6
X2
1
R7
C3
L3
C10
X6
1
C9
X1
1
X4
1
C1
24
2
1
X8
4
1
X5
X9
1